Supplement 5 - MK 21 Electric Burner

5.1 General Information

This supplement details the instructions and limitations necessary to ensure the safe operation, maintenance and continued airworthiness of the Ultramagic MK 21 Double Burner when fitted with the electric blast valve option.

The Ultramagic Mk 21 Double Burner may be fitted with an optional electrically operated main blast valve. Electrical operation of the valve is via a radio control transmitter held by the pilot.

The valve is fitted to the left and right burners, allowing remote operation of the left, right, or both main blast valves. The left and right main valves may be operated both electrically and manually thus providing full burner function in the event of a power supply failure. Electrical operation may therefore be considered as an additional means of firing the main blast valves.

The burner is provided with a receiver / battery box, a special cable to link the receiver to the burner and a remote radio “keyfob” style transmitter. A 12-Volt rechargeable battery is housed within the receiver box and this provides power to the receiver and the solenoid valves.

All other burner functions are as described in the relevant section of the Flight Manual.

The burner may be seen in figure 1. With the exception of the wire connection to the left-hand burner, components and sub assemblies used in the burner construction are identical.

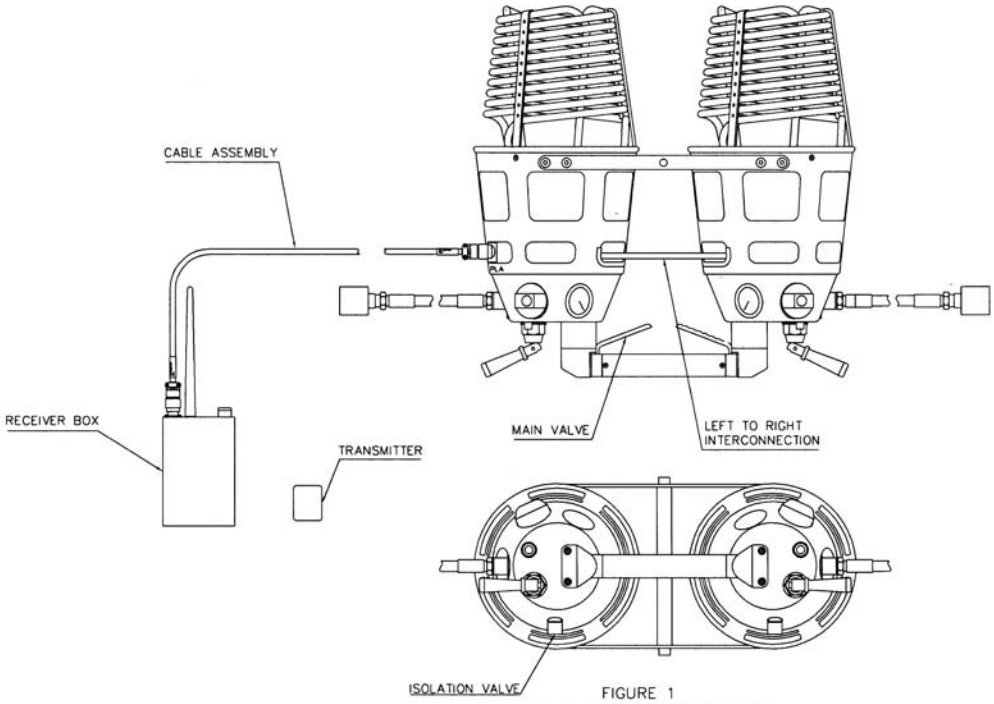

FIGURE 1
MK 21 BURNER ARRANGEMENT
ELECTRIC BLAST VALVE OPTION

5.1.1 Controls and Control Functions

With the exception of the controls associated with the electric blast valve, the function of all the burner controls are as described in the Flight Manual. Only those controls and functions associated with the electrical operation are therefore described.

Receiver Box

ON / OFF Pushbutton

The ON / OFF pushbutton control is mounted on the upper surface of the Receiver Box and can be seen in Figure 2.

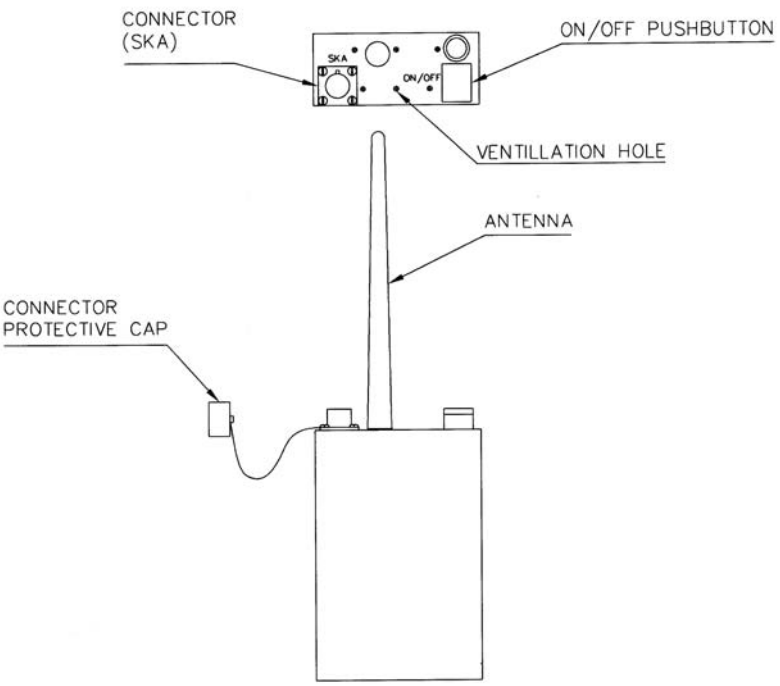

FIGURE 2
RECEIVER BOX

Control Type: Guarded, two-position, illuminated latching pushbutton.

When in the up (OFF) position, the receiver box is switched off and all functions associated with the electrical operation of the burner are disabled.

When in the down (ON) position, the pushbutton illuminates to indicate that the receiver box is on and that all functions associated with the electrical operation of the burner are enabled.

Note: Full non-electrical operation of the burner is maintained irrespective of the position of the ON/OFF pushbutton.

Transmitter

The burner is provided with a "keyfob" style transmitter for the purposes of firing the left, right and both main burners. The transmitter is available in two sizes depending upon pilot preference. The smaller of the two transmitters is shown in figure 3 but the description of the controls and their associated functions is identical for both transmitters.

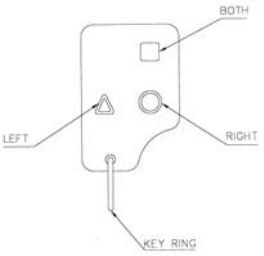

FIGURE 3
TRANSMITTER

Left: Control type: Momentary action pushbutton

Operation of the "Left" pushbutton will cause the left-hand main burner to fire provided that the ON/OFF switch on the Receiver Box is in the ON position. The left main burner will continue to fire for as long as the button is depressed. Upon release of the button, the left main burner will be extinguished.

Right: Control type: Momentary action pushbutton

Operation of the "Right" pushbutton will cause the right-hand main burner to fire provided that the ON/OFF switch on the Receiver Box is in the ON position. The right main burner will continue to fire for as long as the button is depressed. Upon release of the button, the right main burner will be extinguished.

Both: Control type: Momentary action pushbutton

Operation of the "Both" pushbutton will cause both the left and right main burners to fire simultaneously provided that the ON/OFF switch on the Receiver Box is in the ON position. Both main burners will continue to fire for as long as the button is depressed. Upon release of the button, both main burners will be extinguished.

Isolation Valve

An Isolation Valve is fitted in the side of the left and right burner blocks as shown in Figure 1. The valve is used to enable or disable the flow of fuel to the Solenoid Valves.

The valve knob is provided with engraved legends. The “0” legend indicates the direction of rotation necessary to turn off the valve. The “1” legend indicates the direction of valve rotation necessary to turn on the valve.

Control type: Rotary action “knob”.

Rotation of the knob in a clockwise (“0”) direction prevents the flow of fuel to the Solenoid Valve and disables the electrical operation of the main burner.

Rotation of the knob in an anticlockwise (“1”) direction enables the flow of fuel to the Solenoid Valve and enables the electrical operation of the main burner provided that the Receiver Box is on.

Note: Full non-electrical operation of the burner is maintained irrespective of the position of the Isolation Valve.

5.2 Operational Limitations

The following limitations are additional to those already stated in the Flight Manual.

5.2.1 Fuel Pressure

When the fuel pressure exceeds 12 bar (175 psi), the electrical system must be switched off and the Isolation Valve must be closed.

5.2.2 Refuelling

Prior to refuelling the fuel cylinders, ensure that the Receiver Box is switched OFF, the cable assembly is disconnected from the burner or Receiver Box and that the transmitter is safely stowed and incapable of inadvertent or accidental operation.

5.2.3 Battery Charger

The battery may only be recharged using the battery charger supplied by Ultramagic.

5.3 Emergency Procedures

5.3.1 Loss of Electrical Valve Operation

In the event that the electrical valve fails to operate, switch off the power at the Receiver Box. Close the Isolation Valve. Continue to operate the burner using the manual controls as normal. Land as soon as possible.

5.3.2 Failure of Electric Valve to Turn Off

In the event that the burner fails to extinguish after operating the electric valve, turn off the fuel supply at the cylinder. When the main burner flame has extinguished, operate the

appropriate transmitter button and make sure that the Solenoid Valve is fully vented. Close the Isolation Valve. Turn off the electrical system by operating the pushbutton on the Receiver Box. Re-open the cylinder valve and check to ensure that no fuel is leaking from the solenoid valve. Continue to operate the burner using only the manual controls. Land as soon as possible.

5.3.3 Failure of Solenoid Valve to Close

High fuel pressures or debris in the fuel can prevent the Solenoid Valve closing. This can result in the failure of the main valve to turn off or a slow leak of fuel from the Solenoid Valve Exhaust. In the event that the main valve fails to turn off proceed as detailed in 5.3.2. In the event that fuel leaks from the solenoid exhaust, turn off the Isolation Valve. Operate the appropriate transmitter button to fully vent the Solenoid Valve. Turn off the electrical system by operating the pushbutton on the Receiver Box. Continue to operate the burner using only the manual controls. Land as soon as possible.

5.4 Normal Procedures

The following procedures are additional to those already contained in the Flight Manual.

5.4.1 Charging the Battery

Before charging the battery, ensure that the Receiver Box is removed from the basket and is placed away from fuel cylinders or other combustible gases.

Stand the Receiver Box upright such that the ventilation holes are uppermost. Make sure the Receiver Box is in a well-ventilated area to allow the hydrogen gas generated during the recharging process to safely disperse.

Ensure that the Receiver Box is switched OFF. Connect the connector on the battery charger lead to connector SKA on the Receiver Box. Switch on the charger.

When the battery is fully charged, switch off the charger before disconnecting from the Receiver Box.

5.4.2 Preparation for Flight

Place the Receiver Box in the bag provided and secure to one of the burner flexible supports. Connect the Cable Assembly to SKA on the Receiver Box and to PLA on the Burner.

Turn ON the Receiver Box and open the Isolation Valve. Check all electrical functions by operating the transmitter buttons.

5.4.3 Preparation For Landing

Prior to landing, turn off the electrical system by operating the pushbutton switch on the Receiver Box and turn off the Isolation Valve. Continue to operate the burner using the manual controls as normal.

5.4.4 Post Flight Instructions

Upon completion of a flight, make sure that the burner is completely vented of fuel. Vent off the burner manually in the normal fashion. Close the Isolation Valves and operate the main valves electrically. This process ensures that any fuel trapped between the Isolation Valves and the Solenoid Valves is vented.

When not in use, ensure that the electrical equipment is turned off, the Receiver Box is disconnected from the burner and the Isolation Valves are closed.

5.5 Loading

No change

5.6 Balloon and Systems Description

No change

5.7 Balloon Maintenance, Handling and Care

Instructions for the Maintenance, Handling and Care of the MK21 Burner when fitted with the electric blast valve operation are contained in the Maintenance Manual Supplement No. 1.

When the burner is not in use, ensure that it is fully vented of fuel and that it is not connected to a fuel supply.

5.8 Other Manufacturers Equipment

No change.